SOUND SHIELD APPLICATION
M1276A2.11 1800 RPM 60 Hz 280 KW 3ø
M1276A2.51 1500 RPM 50 Hz 230 KW 3ø

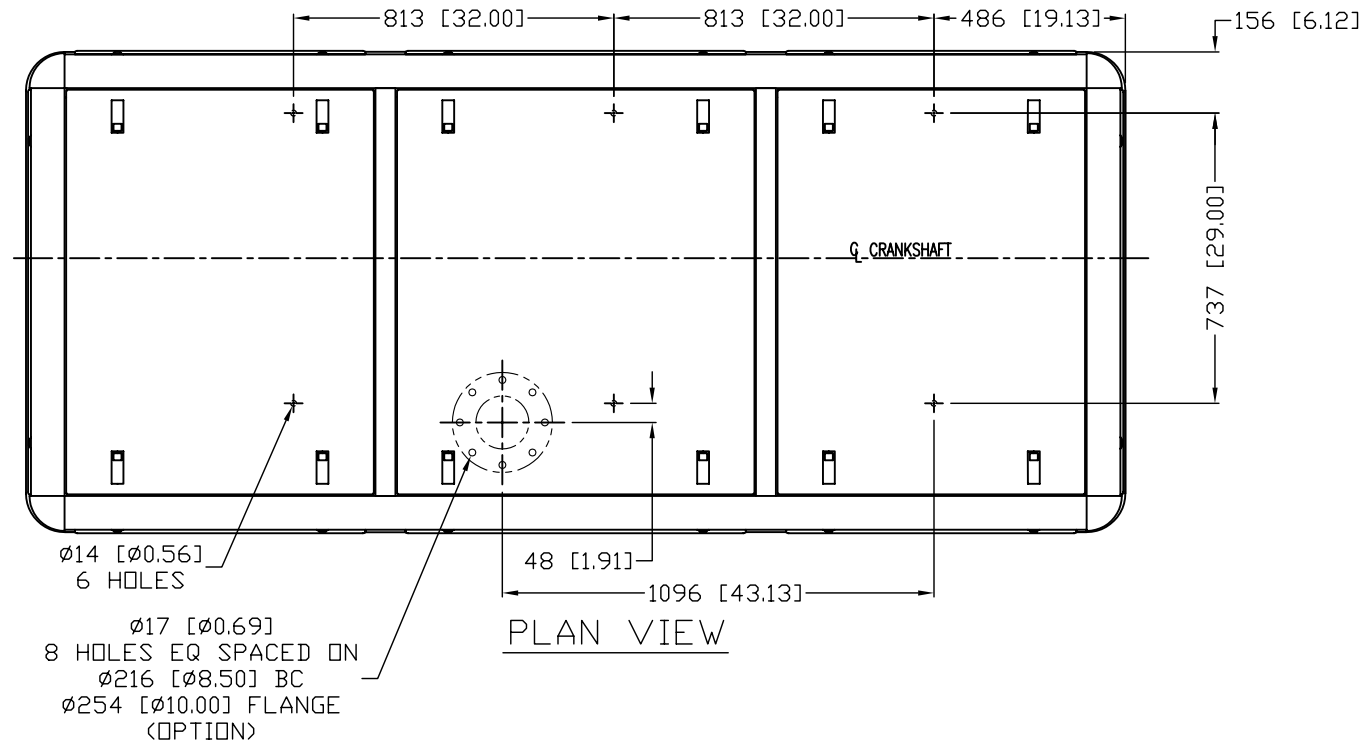

PLAN VIEW

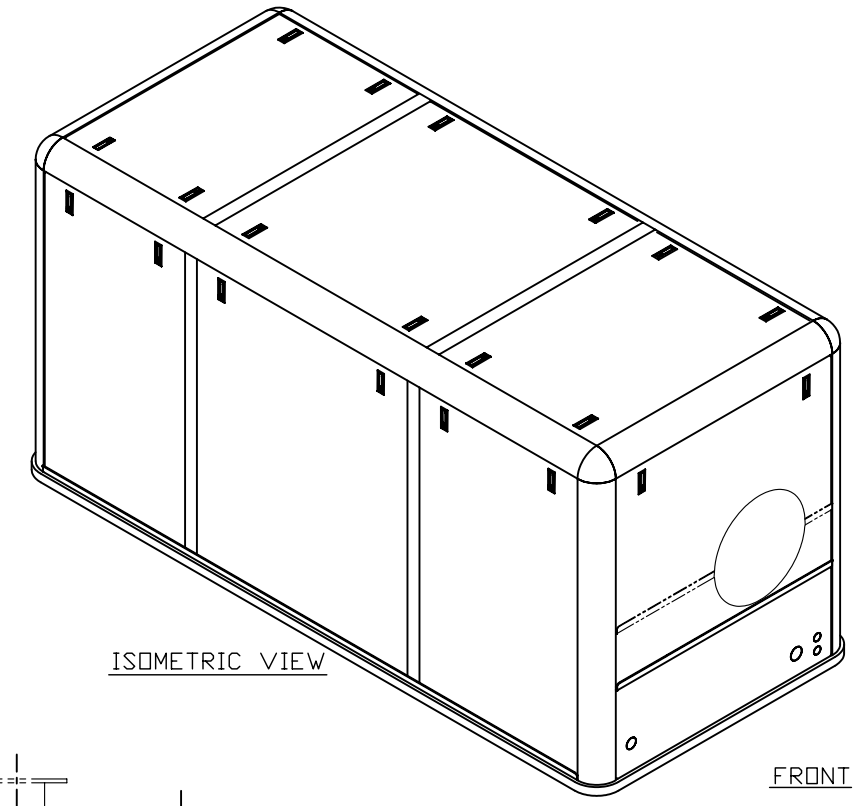

ISOMETRIC VIEW

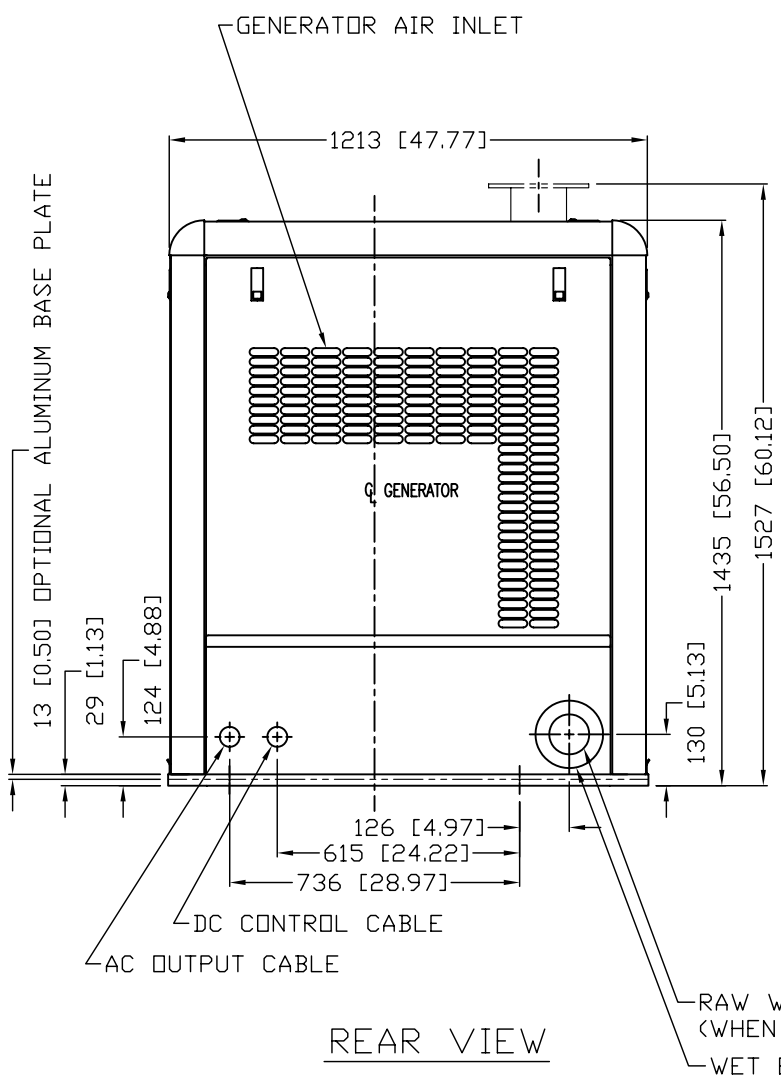

REAR VIEW

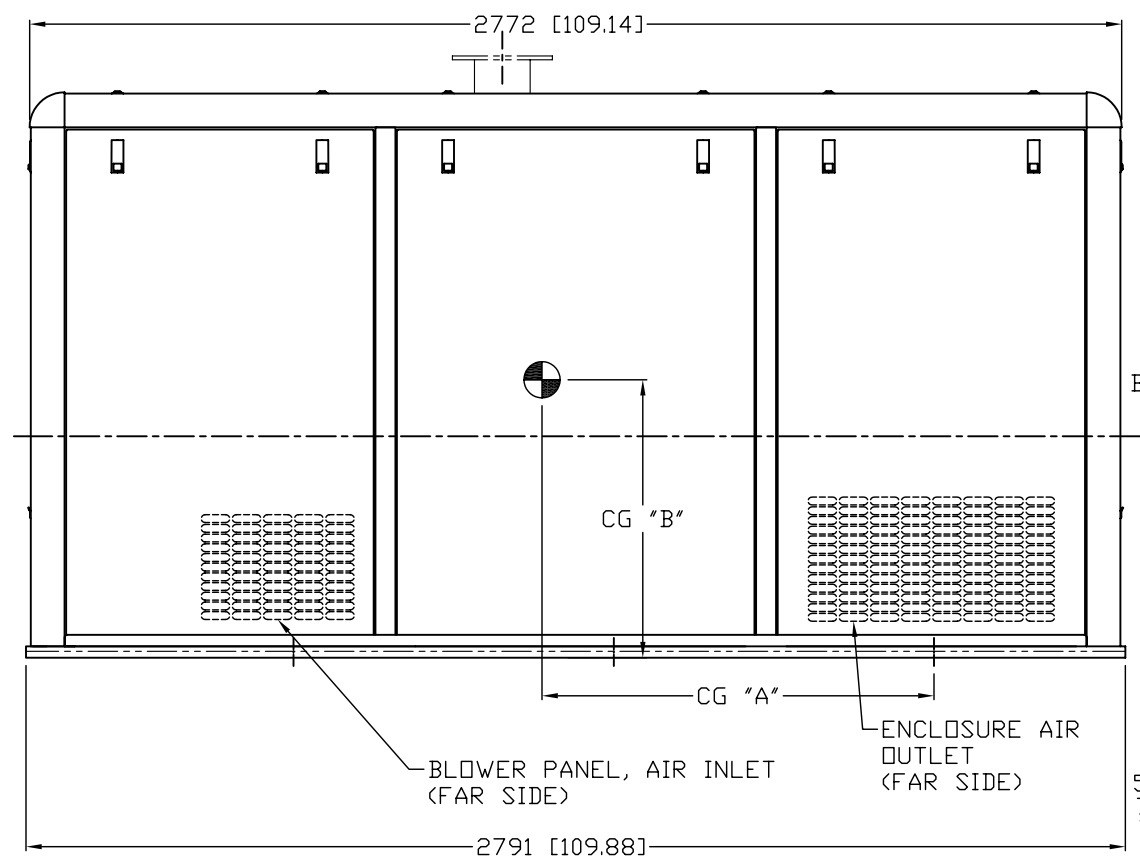

RIGHT (SERVICE) SIDE ELEVATION

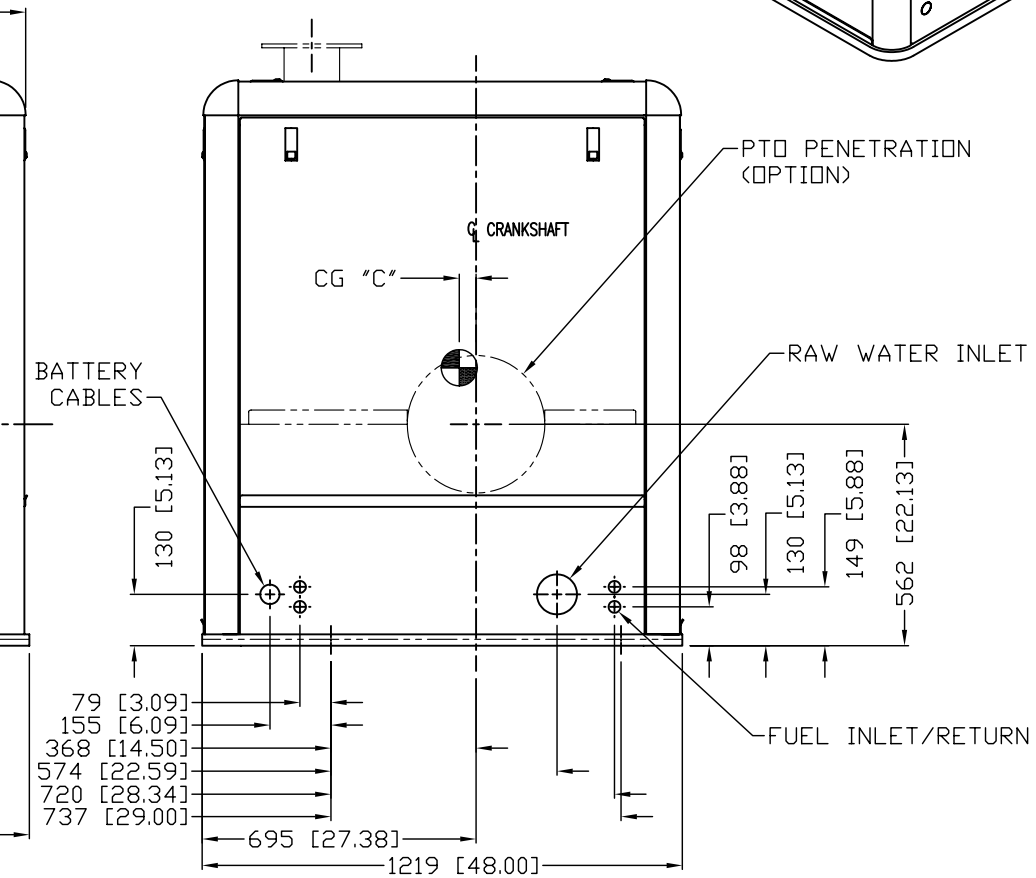

FRONT VIEW

THE DIMENSIONS ON THIS DRAWING ARE SUBJECT TO CHANGE. PLEASE CONTACT ADE TO BE SURE YOU HAVE THE MOST CURRENT REVISION.

CENTER of GRAVITY mm [in]		
A	B	C
995 [39]	705 [28]	43 [1.7]

TOLERANCES UNLESS OTHERWISE SPECIFIED
X: ±0.5
X.X: ±0.3
ANGULAR: ±1.0

CAD
REVISE ON CAD ONLY

THIRD ANGLE PROJECTION

SYMBOL	DATE	DESCRIPTION	BY	CHECKED

REVISIONS

DRAWN:	LTP	06/21/06
CHECKED:		
APPROVED:		
SCALE:	1/1	
RELEASED:		
SHEETS:	1 OF 1	
UNITS OF MEASURE:	MM [IN]	

NORTHERN LIGHTS
4420 14th Avenue N.W.
Seattle, WA 98107
(206) 789-3880
www.northern-lights.com

TITLE: INSTALLATION DIMENSIONS
M1276A2 SOUND SHIELD

P/N:
DWG. NO.: D-4138
REV.: