MODELS	APPROX WT. lbs (kg)	CENTER of GRAVITY in (mm)			CENTER of GRAVITY WITH PMG.		
		A	B	C	A	B	C
MP65C2 65kW 1800 RPM 60Hz 3ø	2075 (941)	2.6 (66)	2.5 (64)	2.0 (51)	2.1 (53)	2.5 (64)	2.0 (51)

NOTE:
1) CENTER OF GRAVITY VALUES DO NOT INCLUDE PTO/CLUTCH ASSY.
2) PTO ADAPTER/CLUTCH ASSY (ONLY) WEIGHTS APPROX. 96lbs (43.5 kg)
3) CUSTOMER MUST RECALCULATE CG FOR ADDITION OF HYDRAULIC PUMP.

LEGEND

ITEM	DESCRIPTION	ITEM	DESCRIPTION
1	EXPANSION TANK	11	CENTERBONDED MOUNT
2	COOLANT FILL	12	ALTERNATE DIPSTICK LOCATION (OPTION)
3	ADAPTER,KEEL COOLER INLET (2 1/4" HOSE BARB)	13	OPTIONAL DRY EXHAUST ELBOW 4" #150 STD. FLG.
4	FUEL FILTER	14	CLOSED CRANKCASE VENTILATION SYSTEM
5	CRANKCASE OIL DIPSTICK	15	PTO/CLUTCH SRD MTG FACE, SAE J744C, B OR C OR 2 OR4 BOLT (OPTION)
6	CRANKCASE OIL FILLER	16	PMG COVER - (OPTION, AS REQUIRED)
7	CRANKCASE OIL FILTER	17	FUEL INLET: 3/8" FNPT
8	AIR INLET FILTER	18	FUEL RETURN: 1/4"M, 37-T JIC
9	ADAPTER, KEEL COOLER OUTLET (2 1/4" HOSE BARB)	19	CONNECTION FOR WATER HEATER B= HOT WATER OUT A= RETURN TO ENGINE.
10	ENGINE OIL DRAIN		

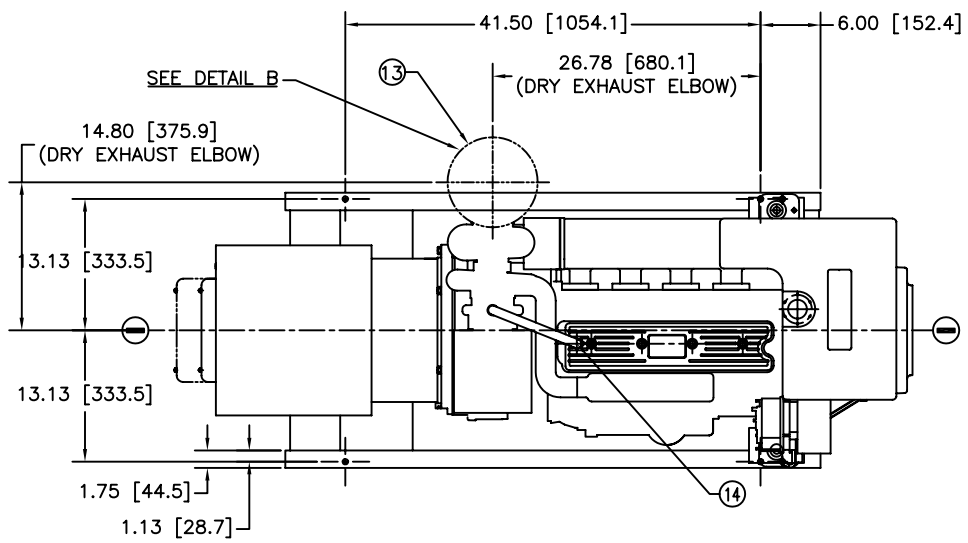

PLAN VIEW

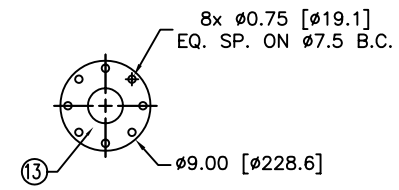

DETAIL B: DRY EXHAUST BOLT PATTERN

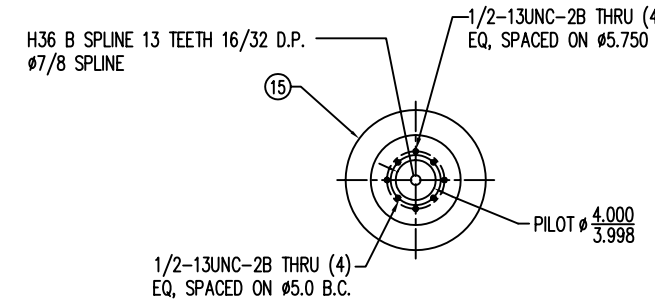

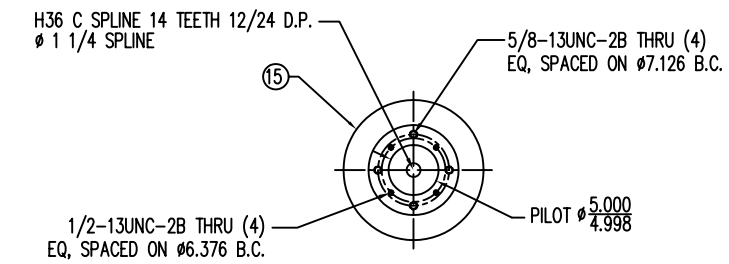

DETAIL A: PTO PAD BOLT PATTERN OPTIONS

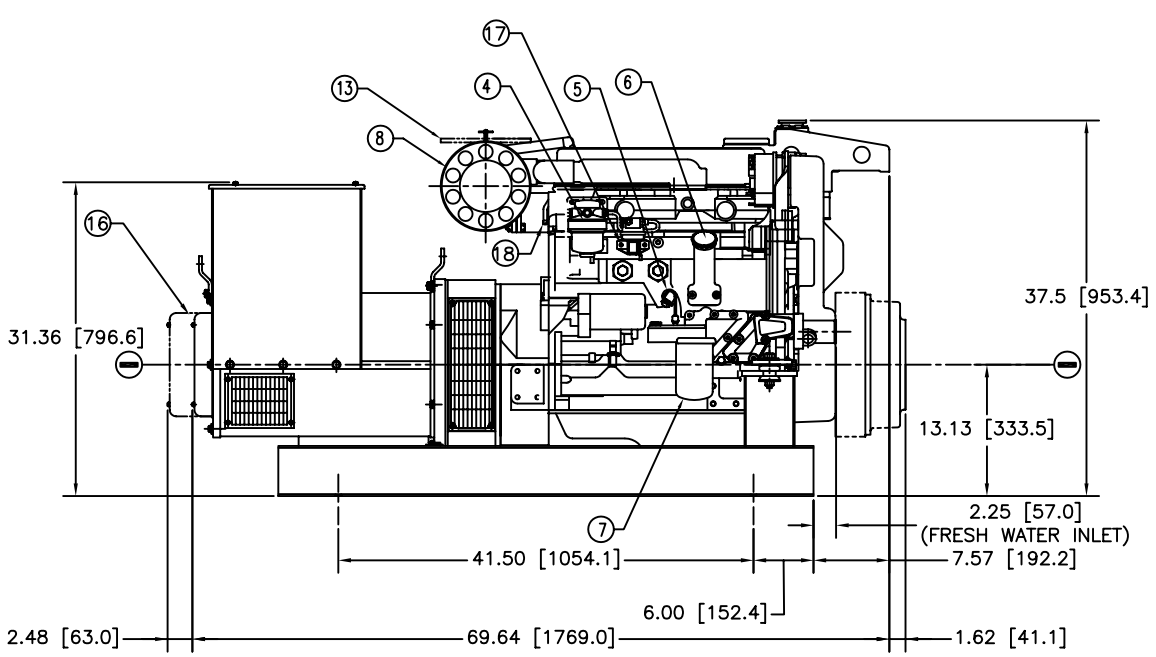

R.H. SIDE ELEVATION

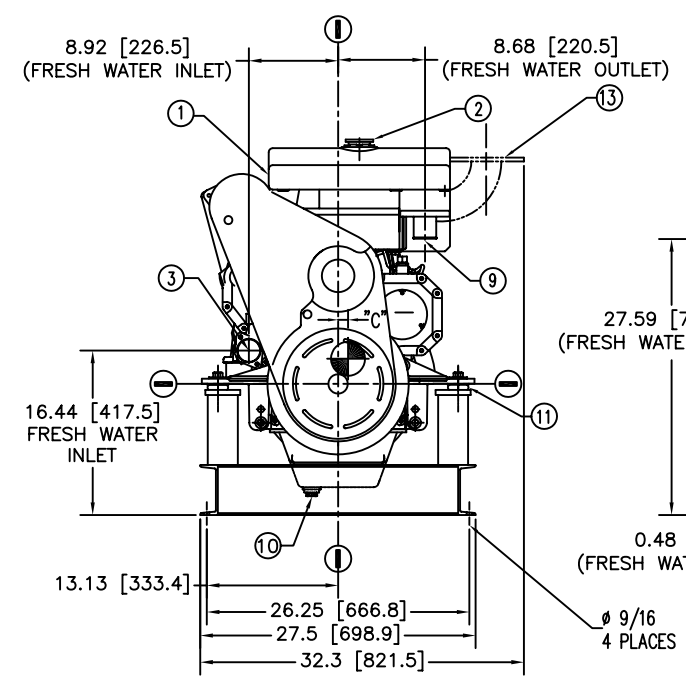

FRONT ELEVATION

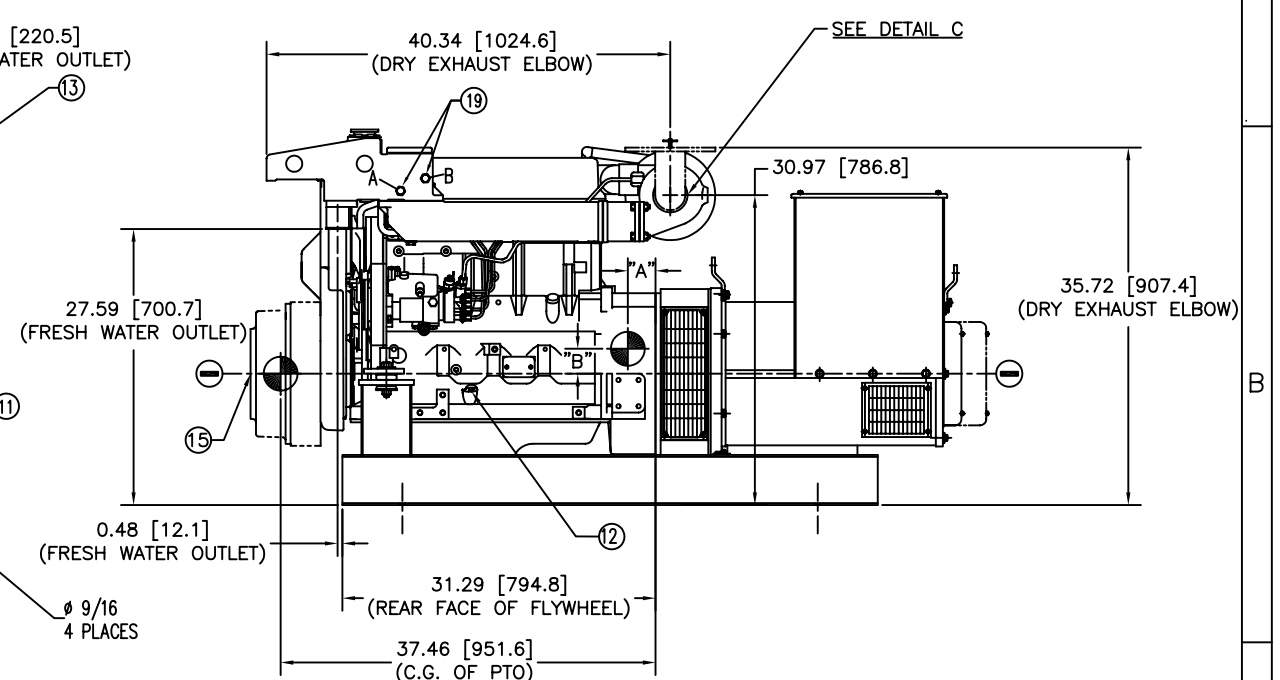

L.H. SIDE ELEVATION

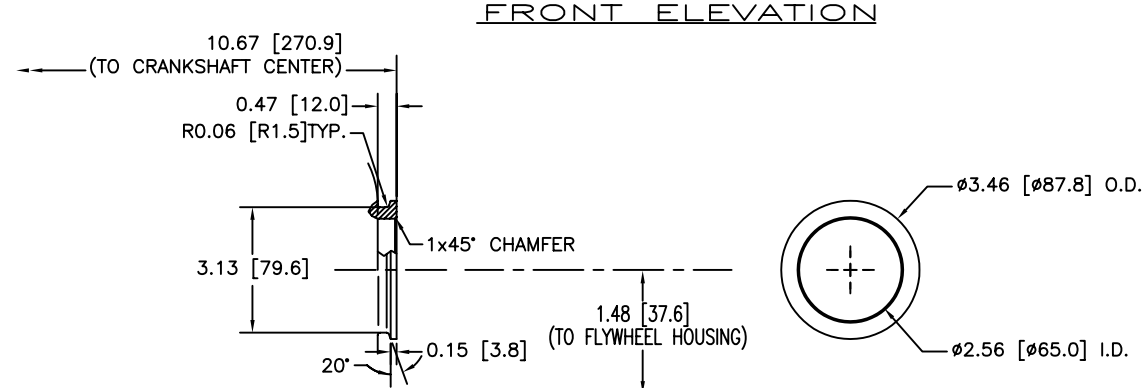

DETAIL C: TURBO (K26) EXHAUST FLANGE

THE DIMENSIONS ON THIS DRAWING ARE SUBJECT TO CHANGE PLEASE CONTACT ADE TO BE SURE YOU HAVE THE MOST CURRENT REVISION.

WEBSITE DRAWING

SYMBOL	DATE	DESCRIPTION	BY	CHECKED

REVISIONS

DRAWN:	LTP	8/2/05
CHECKED:		
APPROVED:		
SCALE: 1:10 (.1" = 1")		
RELEASED:		
SHEETS: 1 OF 1		
UNITS OF MEASURE: INCH [MM]		
REVISE ON CAD ONLY		

ALASKA DIESEL ELECTRIC
4420 14th AVE. N.W., P.O. BOX 70543
SEATTLE, WA 98107 (206) 789-3880

TITLE: INSTALLATION DIMENSIONS
MP65C2 (M1064T/UCI224G16) 65kW 3ø 60Hz K.C. CTRBONDED MT.

P/N: SEE TABLE | DWG. NO.: D-3993 | REV.: